INSTRUCTION MANUAL

Outdoor 27 Inch Round Steel Wood Burning Fire Pit

MODEL NUMBER: COB10514

Thank you for purchasing your new Outdoor 27 Inch Round Steel Wood Burning Fire Pit

DO NOT RETURN THIS ITEM TO THE STORE

Should you encounter problems after following all the steps herein contained please contact our Customer Support by phone at: 1-888-227-3340 or by email: customerservice@dekoliving.com. Kindly provide the model number, place and date of purchase and a short description of the problem.

LIMITED WARRANTY This product has a 1 year Limited Warranty. This warranty is limited to the replacement of defective parts only. Labor charges and/or damage incurred during installation, repair, replacement as well as incidental and consequential damages connected with the above are excluded. Any damage to this product as a result of neglect, misuse, accident, improper installation or use other than the purpose **SHALL VOID THIS WARRANTY**

IMPORTANT, RETAIN FOR FUTURE REFERENCE: READ CAREFULLY

Please read and understand this entire manual before attempting to assemble, operate or install the product. Failure to follow the dangers, warnings and cautions contained in this owners manual may result in a fire or explosion causing damage to property, serious bodily injury or death

01/2024

WARNING
FOR YOUR SAFETY

For Outdoor Use Only
(outside any enclosure)

Installer: Leave these instructions with the consumer.
Consumer: Keep these instructions for future reference.

WARNING
FOR YOUR SAFETY

1) Improper installation, adjustment, alteration, service or maintenance can cause injury or property damage.
2) Read the installation, operation, and maintenance instructions thoroughly before installing or servicing this equipment.
3) Failure to follow these instructions could result in fire or explosion, which could cause property damage, personal injury or death.

LIMITED WARRANTY

This product has a 1 year Limited Warranty. This warranty is limited to the replacement of defective parts only. Labor charges and/or damage incurred during installation, repair, replacement as well as incidental and consequential damages connected with the above are excluded. Any damage to this product as a result of neglect, misuse, accident, improper installation or use other than the purpose SHALL VOID THIS WARRANTY.

WARNING
FOR YOUR SAFETY

1. This fire pit is for outdoor use only.
2. **DO NOT** use this outdoor fire pit in a building, garage, boats recreational vehicles, or any other enclosed area.
3. This outdoor fire pit is not to be operated by children.
4. Always use in accordance with all applicable local, state and national codes. Contact your local fire department for details on outdoor wood burning fire pit.
5. When using this outdoor fire pit, exercise the same precautions you would do with any open fire.
6. The use of alcohol, prescription or non-prescription drugs may impair the consumer's ability to properly assemble or safely operate this outdoor fire pit.
7. **DO NOT** use this outdoor fire pit without reading the entire "Owner's Manual" first.
8. This outdoor fire pit is for use with dry, seasoned hardwood. It will burn hotter, more completely and create less smoke. **DO NOT** burn charcoal briquets , lump charcoal, manufactured logs, driftwood, trash, leaves, paper, cardboard, painted or stained or pressure treated wood. Avoid using soft wood such as pine or cedar that can throw sparks.
9. **DO NOT** use this outdoor fire pit until it is completely assembled. **DO NOT** alter this fire pit in any manner.
10. **DO NOT** use gasoline or other flammable vapors or liquids in the vicinity of this or any other firepit.
11. **DO NOT** use this outdoor Fire pit near automobiles, trucks, vans, recreational vehicles, electrical cords or any other combustible objects.
12. Always use this outdoor fire pit on a hard, level, non-combustible surface.
13. The firepit must be inspected before each use. Always empty the fire pit before use. Leave a thin layer of ash (1/2" thick) to protect the bottom of the fire bowl.
14. The safeguard spark screen must be used while burning.
15. **DO NOT** use in windy conditions.
16. **DO NOT** wear flammable or loose clothing when this outdoor fire pit.
17. **DO NOT** use gasoline, kerosene, diesel fuel, lighter fluid or alcohol to light or relight fires.
18. Children and adults should be alerted the hazards of high surface temperatures and keep a safe distance to avoid burns or clothing.
19. **DO NOT** touch any part of the firepit until it is completely cooled down. Never touch the ashes to see if they are hot.
20. Use long, sturdy fire pit tools to add or move logs, including to take away the safeguard spark screen and replace it.
21. Never leave a lit fire pit unattended.
22. Children should be carefully supervised where they are anywhere near the Fire pit.
23. Clothing or other flammable materials should **NOT** be hung from the fire pit, or place on or near the fire pit.
24. **DO NOT** attempt to move or store this outdoor fire pit until the firepit is completely cooled down.
25. **DO NOT** move ashes until they are completely and fully extinguished.
26. **DO NOT** add additional firewood until the fire burns down.
27. Burning must be inside the metal bowl.
28. **DO NOT** put any hot part of the fire pit onto combustible surfaces such as grass, wooden deck or furniture.
29. All above must be exactly followed.

List Of Parts

Part List	Description	Qty.	Drawings
A	Mesh Lid	1	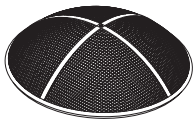
B	Fire Bowl	1	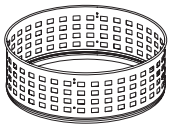
C	Leg	4	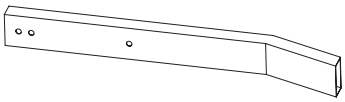
D	BBQ Grill	1	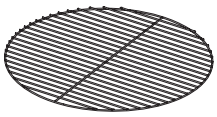
E	Log Grate	1	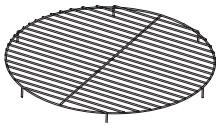
F	Support Bar	4	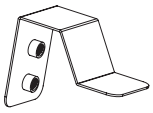
G	Hexagon Wrench	1	
H	Screw M6*25	12	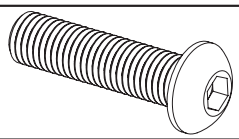
I	Hex Nut M6	4	
J	Lid Ring	1	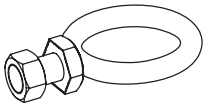

Assembly Instructions

Step 1

Assemble the support Bar (F), Fire Bowl (B) and Legs (C) together with screws (H) and nuts (I).

Tighten all screws accordingly with the provided Hexagon Wrench (G)

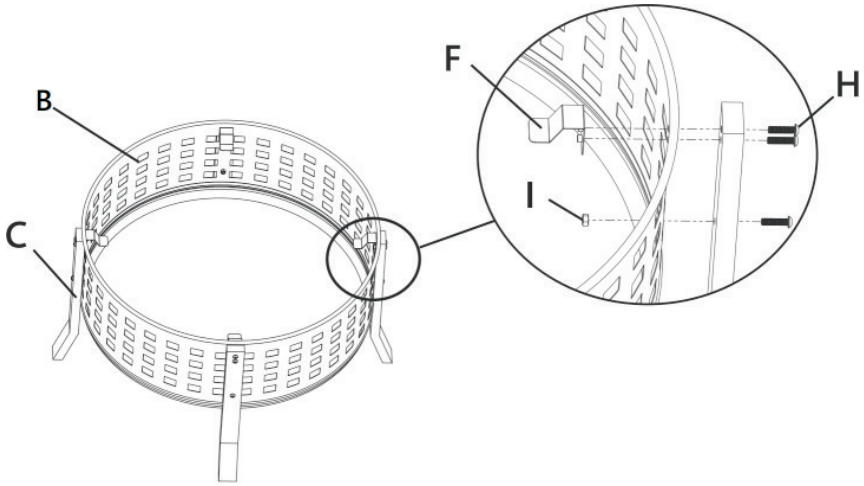

Step 2

Put the Log Grate (E) on the Fire Bowl (B).

Put the BBQ Grill (D) on the Support Bar (F).

Assemble the Lid Ring (J) to the Mesh (A)

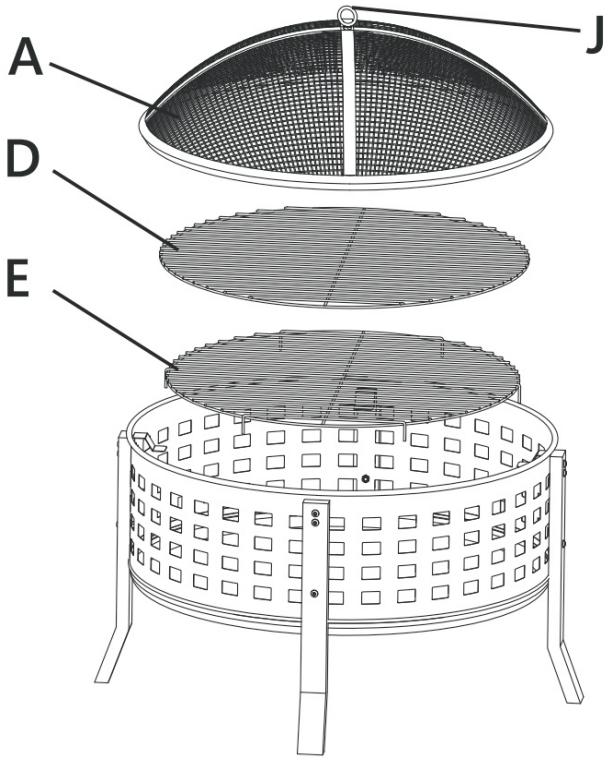

Operating Instructions

WARNING

FOR YOUR SAFETY

Before using this outdoor fire pit, make sure you have read, understood and are following all information provided on page 1 of this manual. Failure to follow those instructions can cause death, serious injury or property damage.

Lighting:
1. Make sure there is only a small amount of ash (1/2" thick) at the bottom of the metal bowl.
2. Place a layer of dry kindling or a natural firestarter onto the center of the log rack.
3. Place above that layer the dry seasoned hardwood that is cut to lengths no more than 12".
4. Use a match to light kindling or firestarter.
5. Replace the safeguard spark screen when the kindling or firestarter is lit.

Tending the Fire:
You may need to shift and/or add logs for an ideal experience.
Reminders:
- Always wear protective gloves
- Wait until glowing woodhas developed before adding any additional wood.
- **DO NOT** add gasoline, kerosene, diesel fuel, lighter fluid or alcohol to relight or enhance an existing fire.

1. Use a long handled fire pit tool to carefully take away the spark screen.
2. Use the long handled fire pit tool to shift the logs to allow additional airflow.
3. If additional wood is required, place wood on top of the burning log. Be careful not to shift ashes.
4. Replace the safeguard spark screen.

Extinguishing
1. Allow fire to burn itself out.
2. **DO NOT** use water to extinguish as this is dangerous and can cause damage to this outdoor fire pit.

Maintenance Instructions

Inspecting:
This outdoor fire pit should be inspected on a regular basis to ensure product safety and longer product life.

Check all parts to make sure they are secure.

Cleaning:
This outdoor fire pit should be cleaned on a regular basis to promote safer experiences and longer product life.

Note: After repeated use, discoloration of the finish may occur.

Reminders:
- **DO NOT** attempt to clean this outdoor fire pit until the fire is COMPLETELY out.
- **DO NOT** use oven cleaner or abrasive cleaners as they will damage this product.
- **DO NOT** clean any part of this outdoor fire pit in a self-cleaning oven as it may damage the finish.
- **DO NOT** use a vacuum cleaner.

1. Wipe exterior surfaces of the metal parts with a mild dishwashing detergent or baking soda.
2. For stubborn surfaces on the metal parts, use a citrus based degreaser and a nylon scrubbing brush.
3. Rinse clean the metal with water.
4. Use a soft dry brush to wipe away the dust from the fire pit body.

Storage:
Wait for the fire pit to cool before covering with the protective cover.
DO NOT move ore store this outdoor fire pit unrill he fire is COMPLETELY OUT.

1. Once the fire is out, logs are cold and outdoor fire pit is cool to the touch, remove ashes and properly dispose.
2. Store assembled in a location away from children and pets.

Note: If you do not use a cover, store this outdoor fire pit in a dry location free from rain.