ENGLISH

INSTRUCTION MANUAL

Outdoor Wicker Sofa with Canopy & Ottoman Set

MODEL NUMBER: COP30007

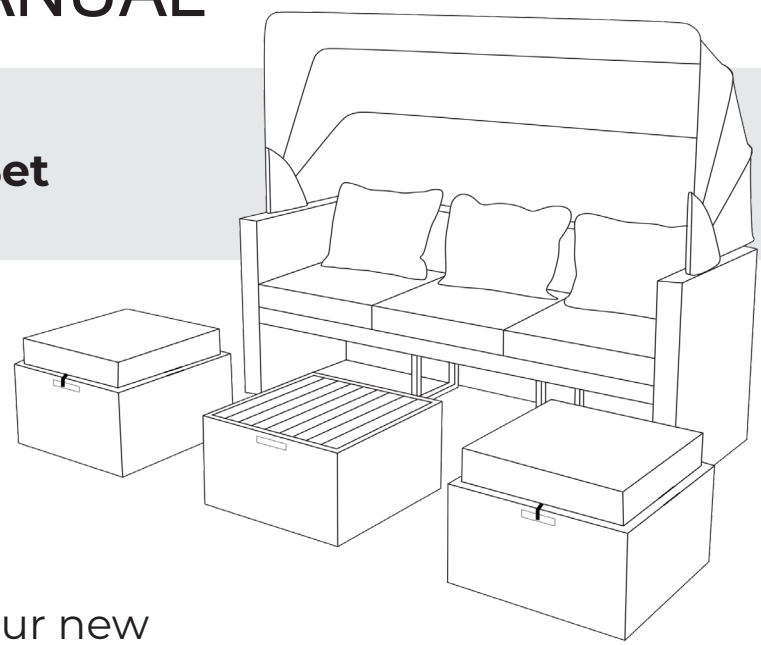

Thank you for purchasing your new Outdoor Wicker Sofa with Canopy & Ottoman Set

DO NOT RETURN THIS ITEM TO THE STORE

Should you encounter problems after following all the steps herein contained please contact our Customer Support: Call 1-888-227-3340 or email: customerservice@dekoliving.com. Kindly provide the model number, place and date of purchase and a short description of the problem.

LIMITED WARRANTY This product has a 1 year Limited Warranty. This warranty is limited to the replacement of defective parts only. Labor charges and/or damage incurred during installation, repair, replacement as well as incidental and consequential damages connected with the above are excluded. Any damage to this product as a result of neglect, misuse, accident, improper installation or use other than the purpose **SHALL VOID THIS WARRANTY**

IMPORTANT, RETAIN FOR FUTURE REFERENCE: READ CAREFULLY

Please read and understand this entire manual before attempting to assemble or install the product. Failure to follow the dangers, warnings and cautions contained in this owners manual may result in causing damage or bodily injury.

01/2024

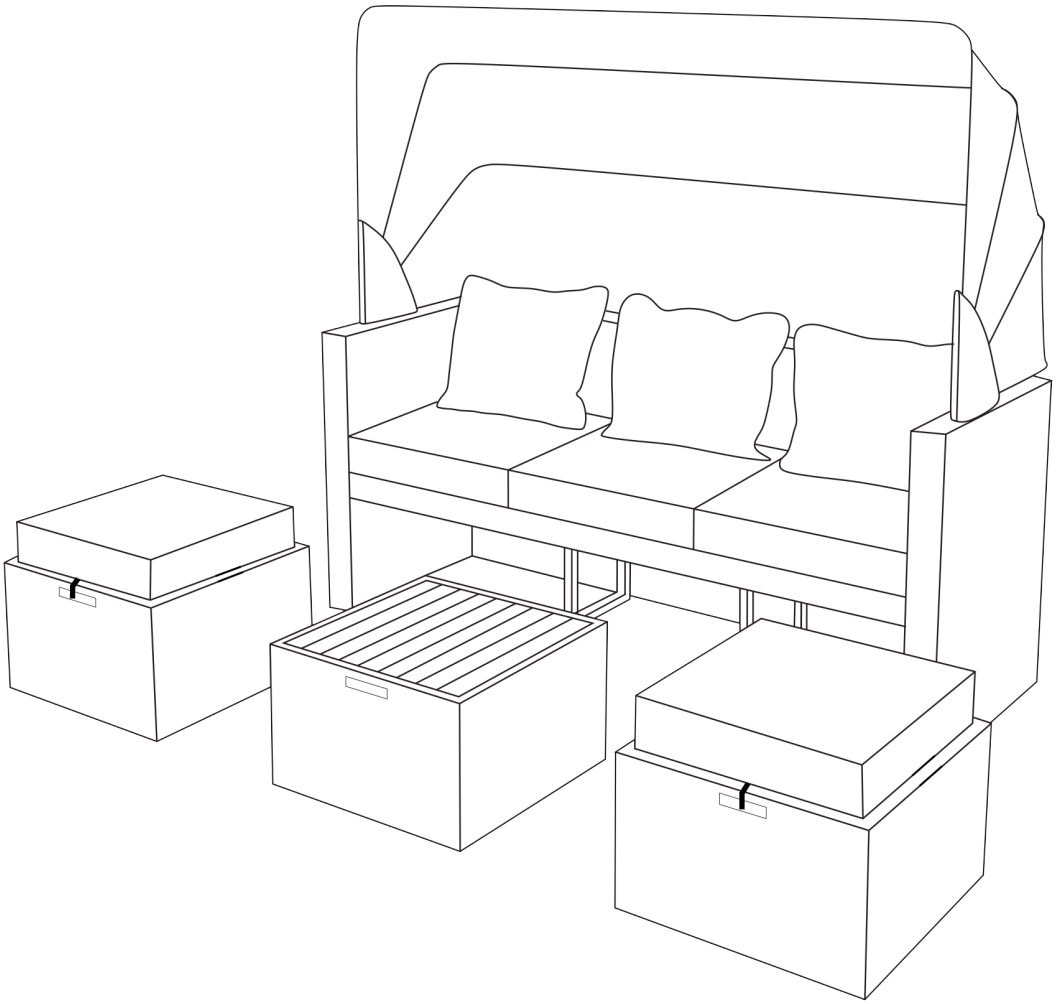

WARNING

FOR YOUR SAFETY

1. Improper installation, adjustment, alteration, service or maintenance can cause injury or property damage.
2. Read the installation, operation, and maintenance instructions thoroughly before installing this equipment.
3. Failure to follow these instructions could result in personal injury or death.

IMPORTANT SAFETY INSTRUCTIONS

SAVE THESE INSTRUCTION

WARNING: This product was made for the explicit purpose of providing outdoor functions and is not to be used as a toy. This product is intended for normal outdoor use; however, the manufacturer recommends storing and/or covering this product when any formidable/severe weather is approaching.

WARNING: Do not locate this product near open flames. Do not use this product as a support. Do not shake, lean or climb on the product. Children under the age of 10, near the product, should be supervised by a competent adult at all times. This product is not intended for commercial use and will void the warranty.

READ ALL INSTRUCTIONS BEFORE USE

To reduce the risk of injury to persons:

1. Close supervision is necessary when this furnishing is used by or near children, or disabled persons, if applicable.
2. Use this furnishing only for its intended use as described in these instructions. Do not use attachments not recommended by the manufacturer.
3. Do not move the product while it is occupied. Failure to obey this caution could result in injury.
4. Do not rock in the product as you may fall and cause serious injury.

WARNING: The seller and manufacturer will not be liable for any personal injury, property damage or loss, which result from the incorrect assembly, improper use, inadequate maintenance, or neglect of the product. Whether it's direct, indirect, or incidental.

CAUTION: When not in use, secure the product in a cool and covered location.

CAUTION: Do not locate the product near any heat

WARNING: Please keep children out of the assembly area before assembly.

WARNING: Never use this product as a support. Do not shake, lean, or climb on the product at any time.

WARNING: Do not place heavy objects on the product.

BEFORE INSTALLATION

- Please list all parts as below first to check if any part is missing. If so contact customer service.
- Do be careful that some parts are heavy and sharp.
- Please follow the assembly steps to install the product, if you find spare parts left, don't be worried, the left spare parts are prepared for bad ones if occurred.
- Please fully tighten all screws only when they are in place.
- Please do not exceed the bearing limitations of the product.
- Reconfirm that all bolts, screws, and knobs are secure every 90 days.
- Please retain these instructions for future reference.

3x14 3: M6x40	1x12 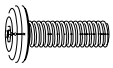 1: M6x20	4x2 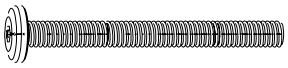 4: M6x110
2x14 2: M6x30	5x42 5: 1x6x16	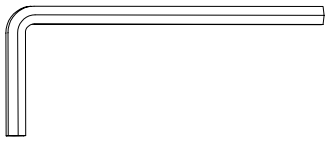
6x2 6: 6x8x20	7x10 7: 2x8x20	8x2 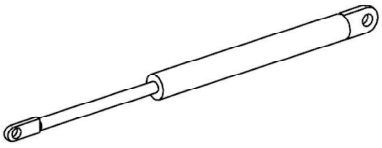 8: ø18x320

List Of Parts

x1 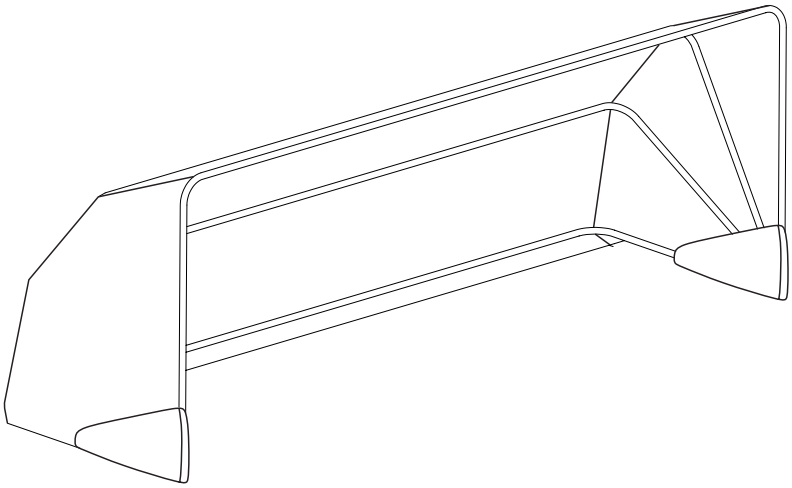	Hx1 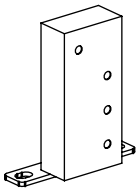
	Jx1 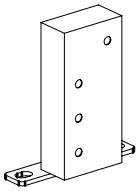
x1	Kx1 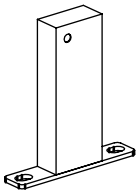
	Lx1 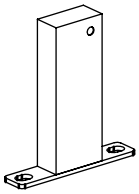

Assembly Instructions

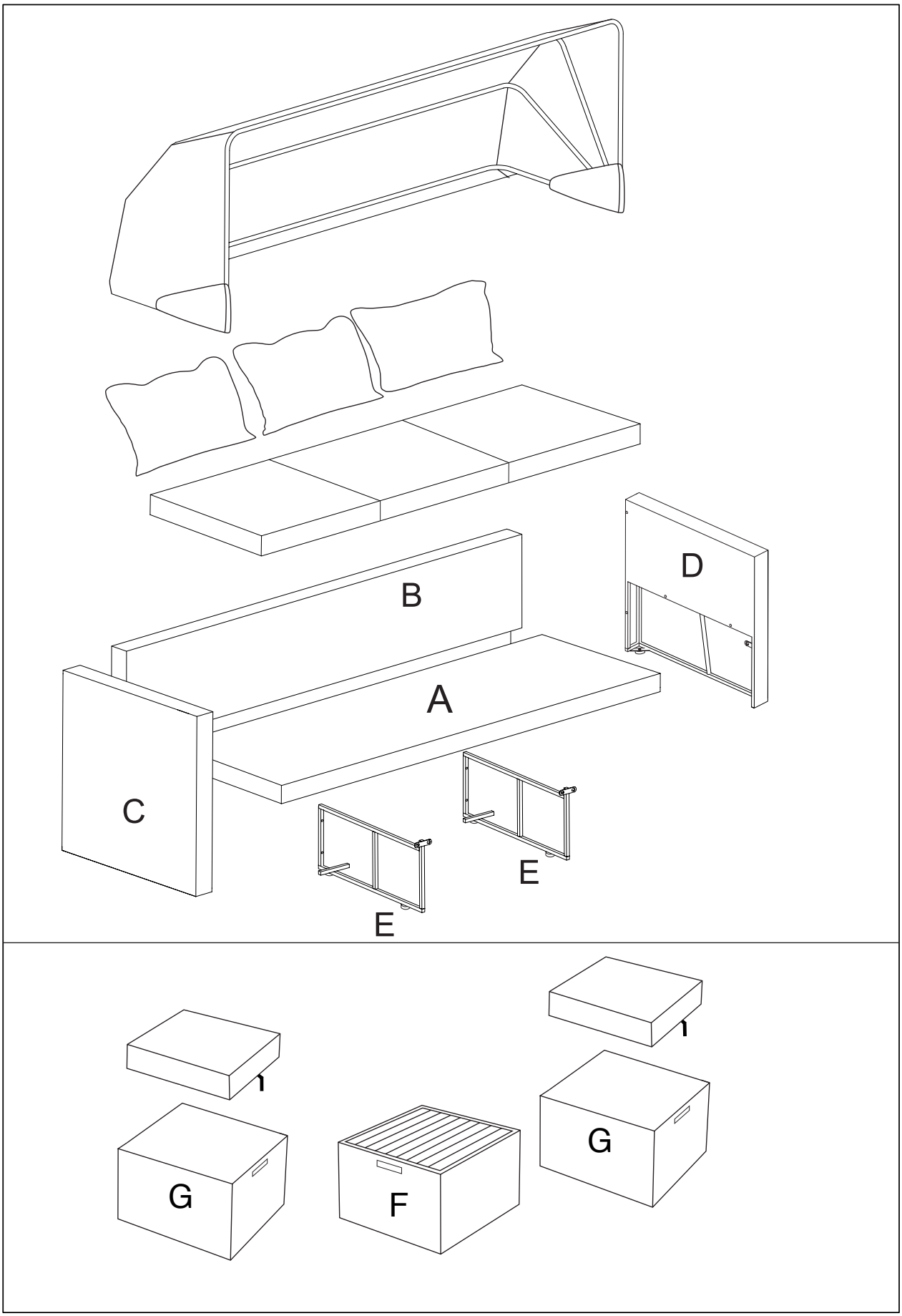

Assembly Instructions

B1

3	M6x40 4pcs
5	4pcs
	1pc

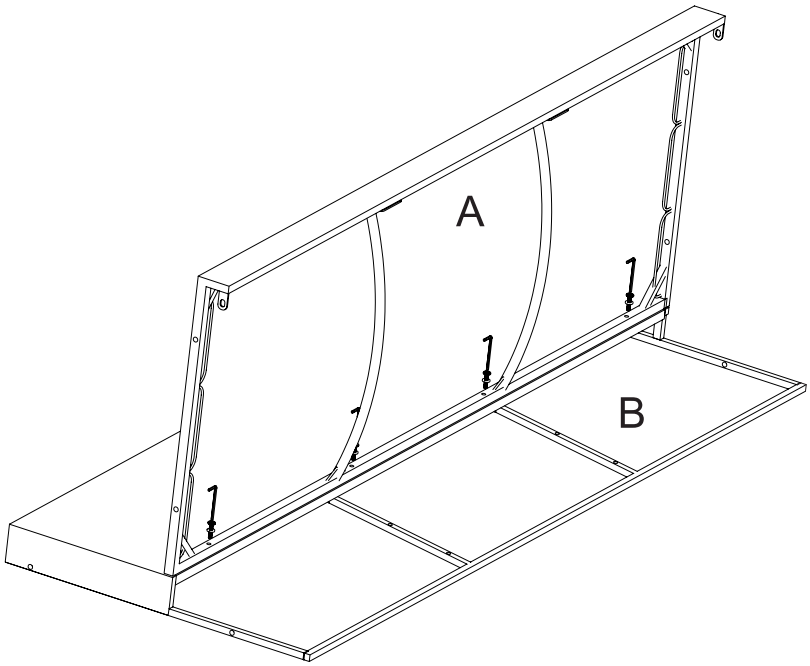

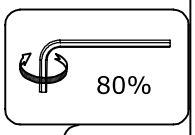

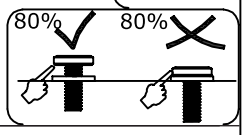

B2

1	M6x20 4pcs
3	M6x40 4pcs
5	8pcs
	1pc

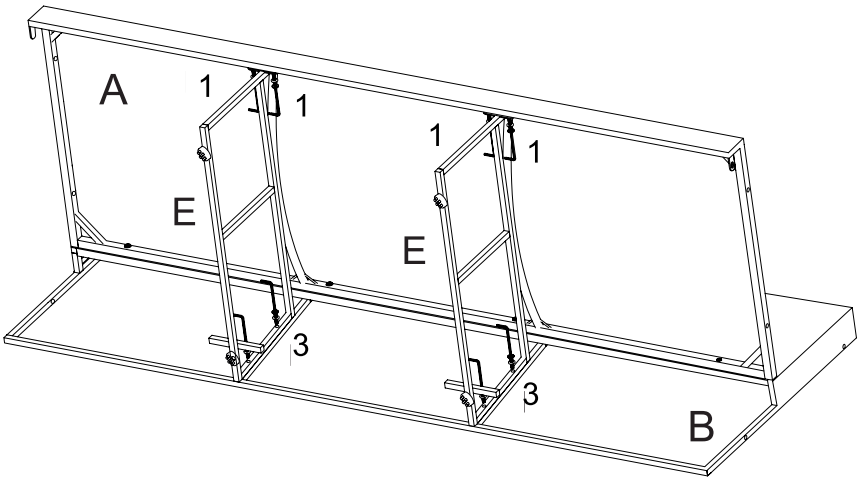

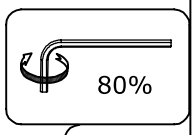

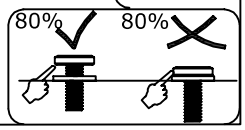

B3

3	M6x40 3pcs
2	M6x30 1pc
5	4pcs
	1pc

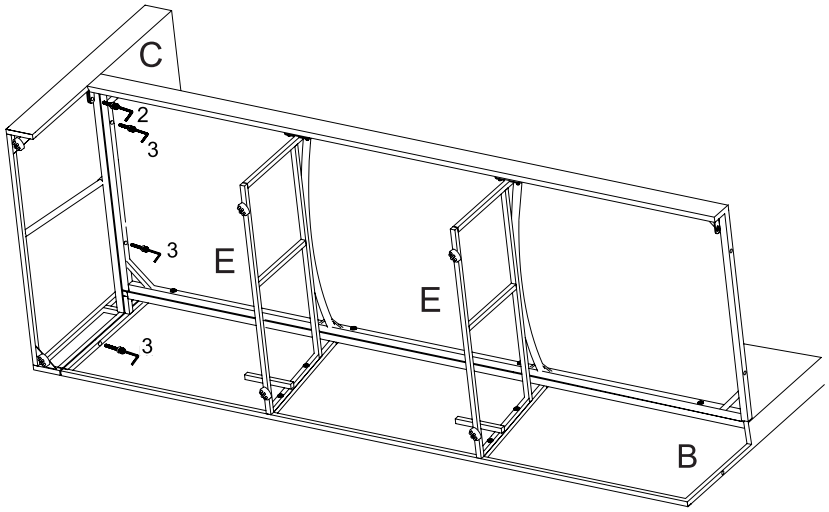

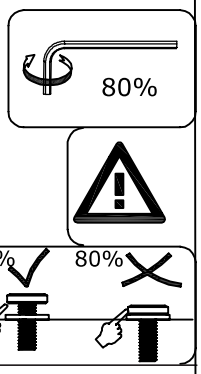

B4

4	M6x110 1pc
5	1pc
	1pc

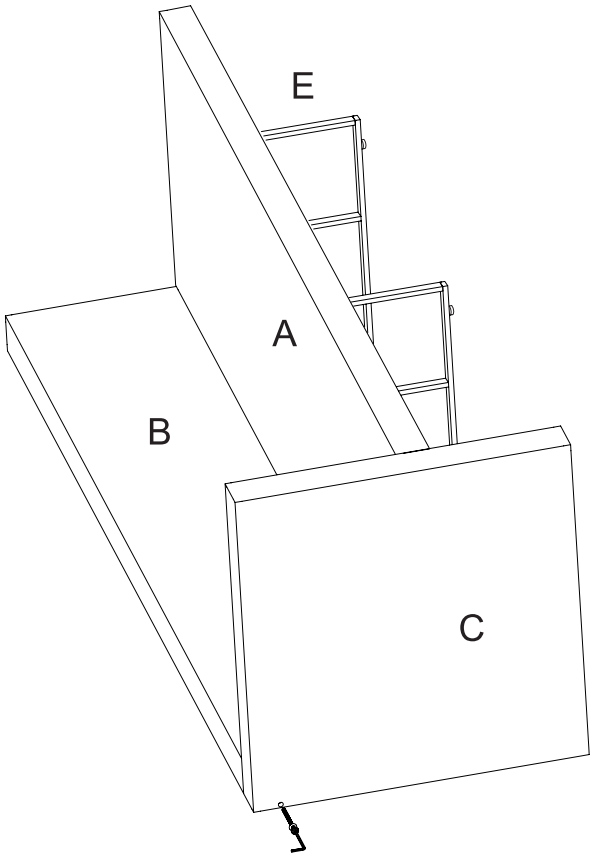

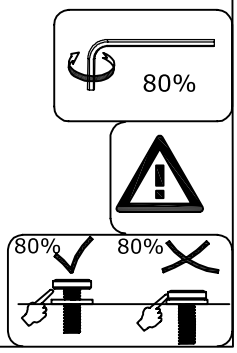

B5

3	M6x40 3pcs
2	M6x30 1pc
5	4pcs
	1pc

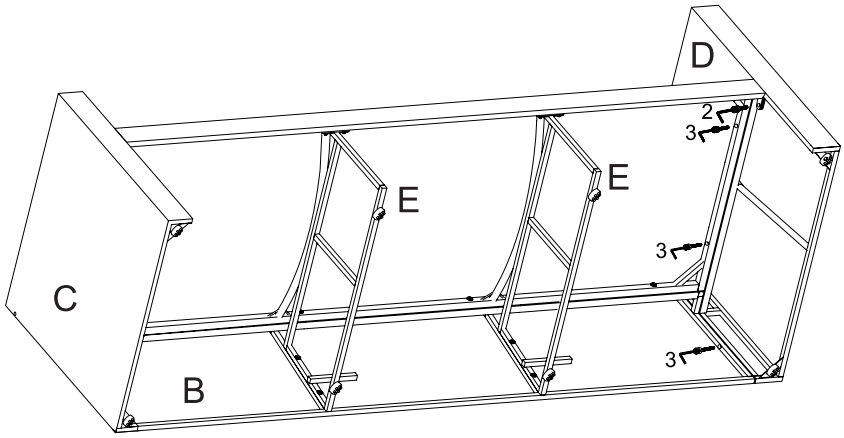

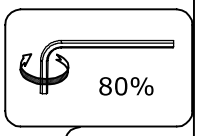

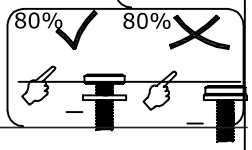

B6

4	M6x110 1pc
5	1pc
	1pc

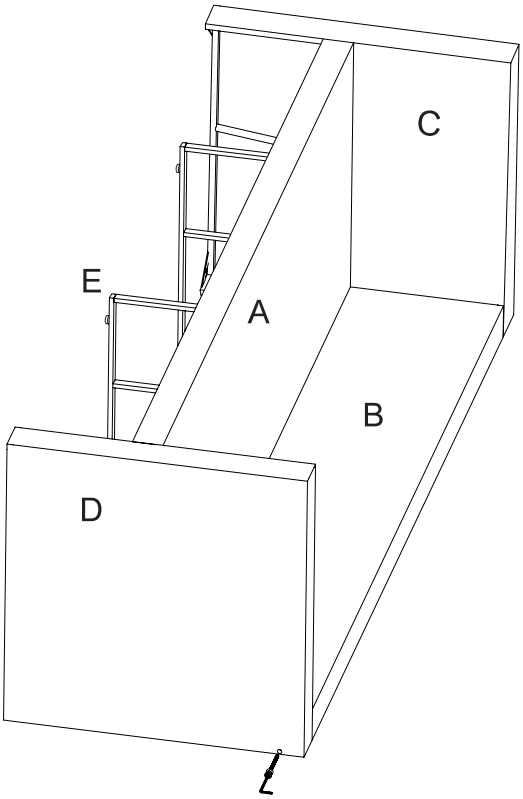

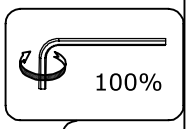

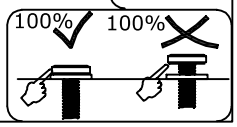

Assembly Instructions

B7

2	M6x30 **8pcs**
5	**8pcs**
7	**8pcs**
	1pc

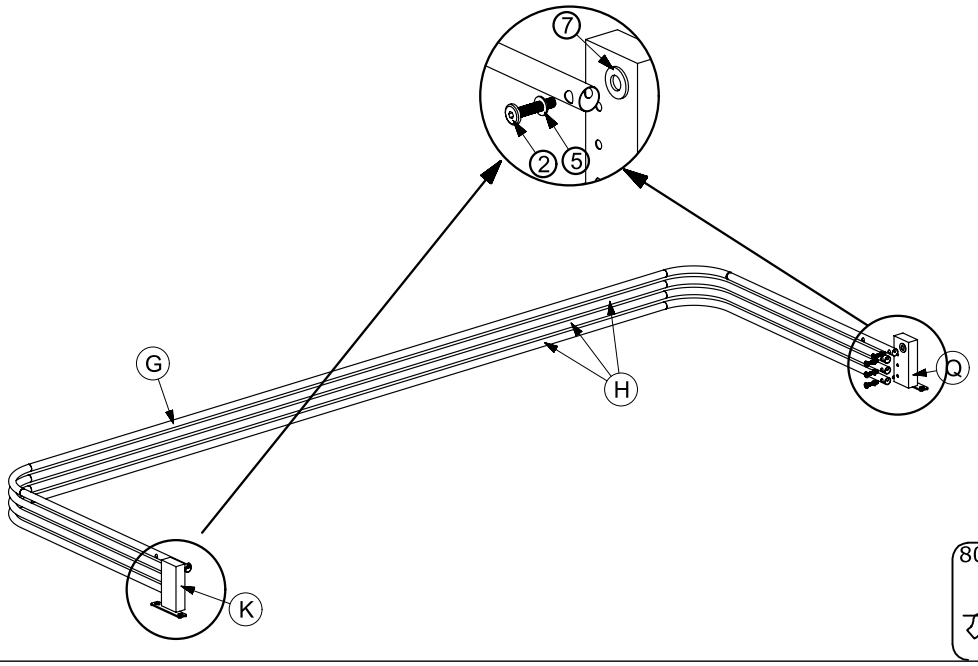

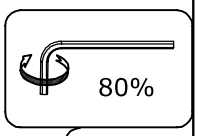

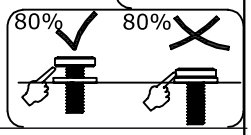

B8

2	M6x30 **4pcs**
5	**4pcs**
6	**2pcs**
7	**2pcs**
	1pc

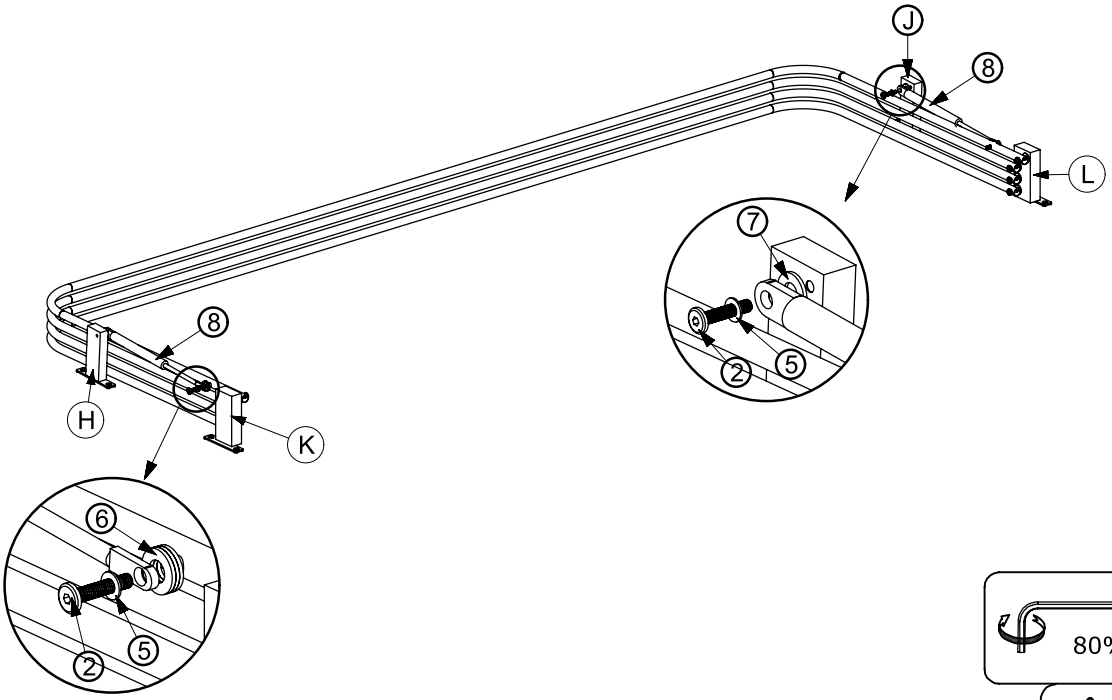

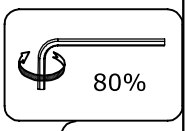

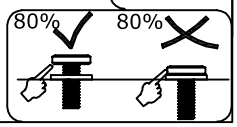

Assembly Instructions

B9

1	M6x20 8pcs
5	8pcs
	1pc

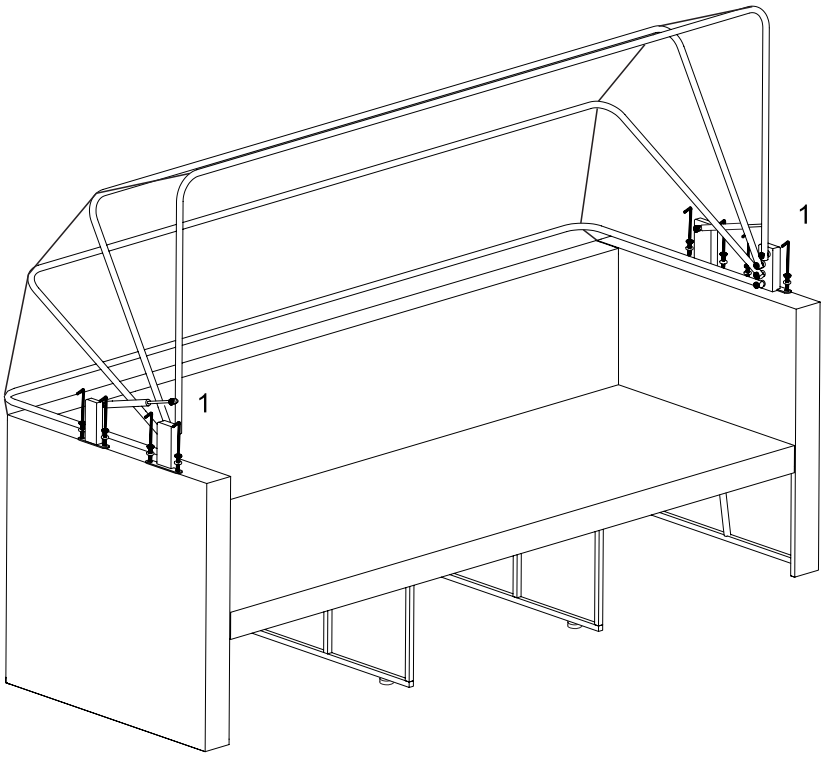

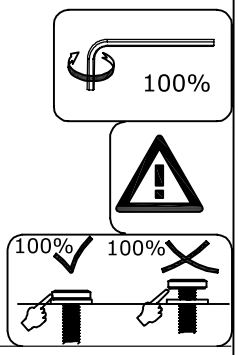

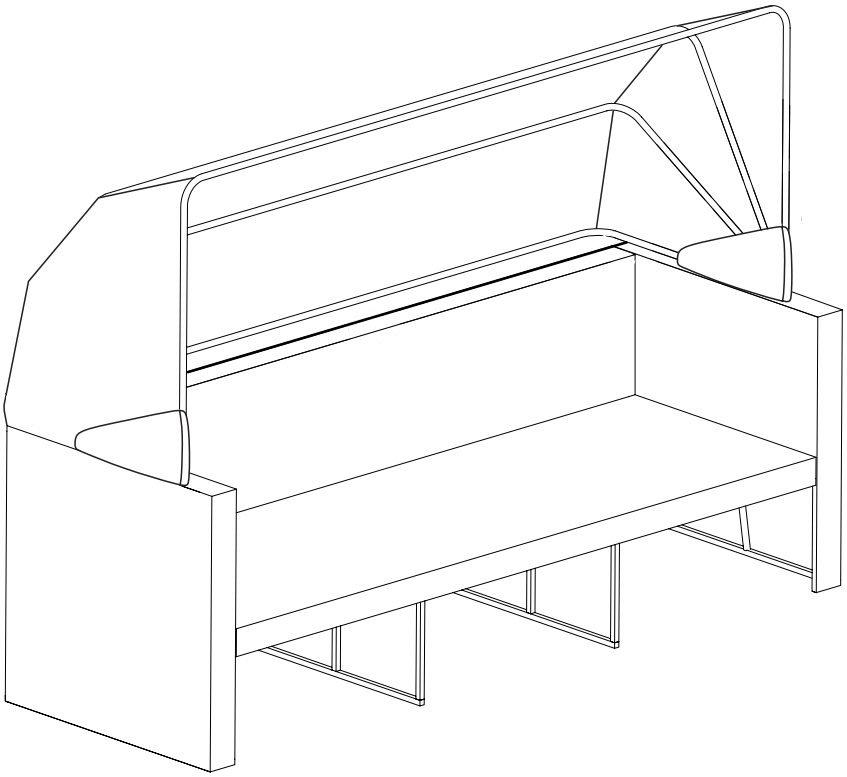

B10

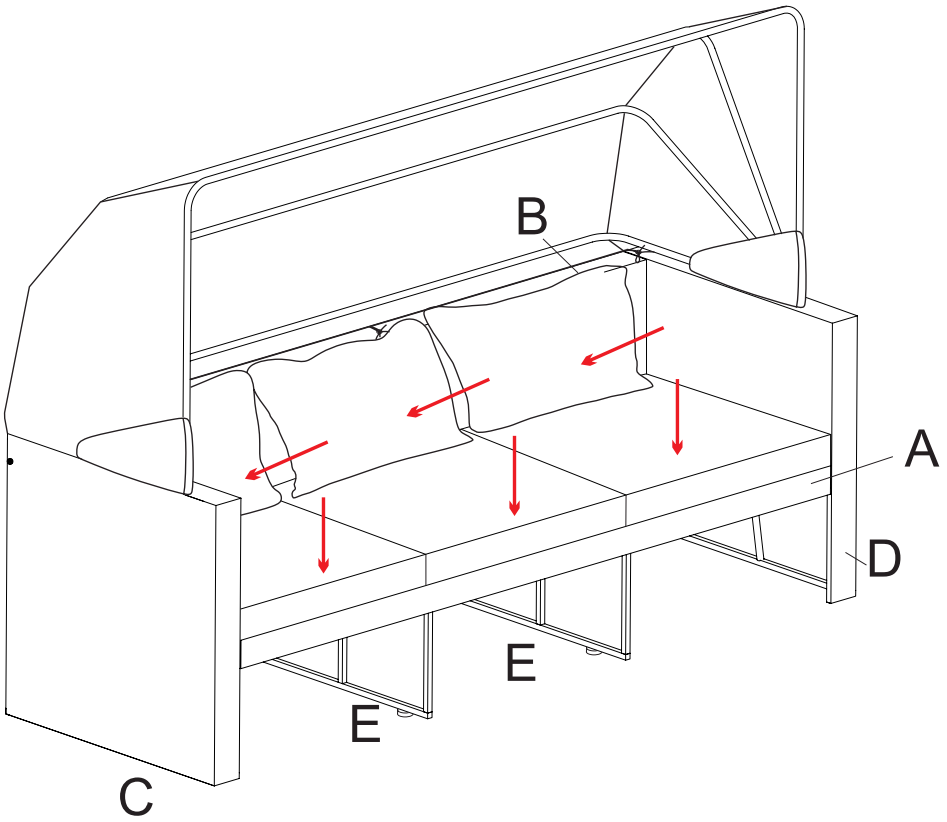

B11

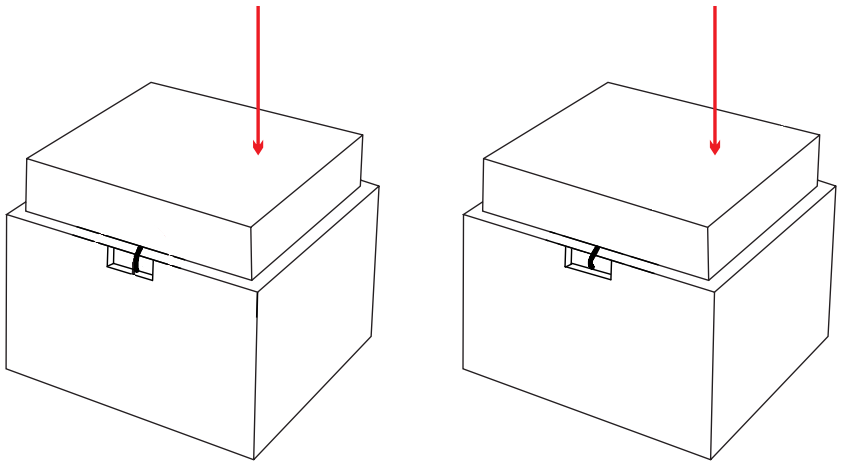

B12

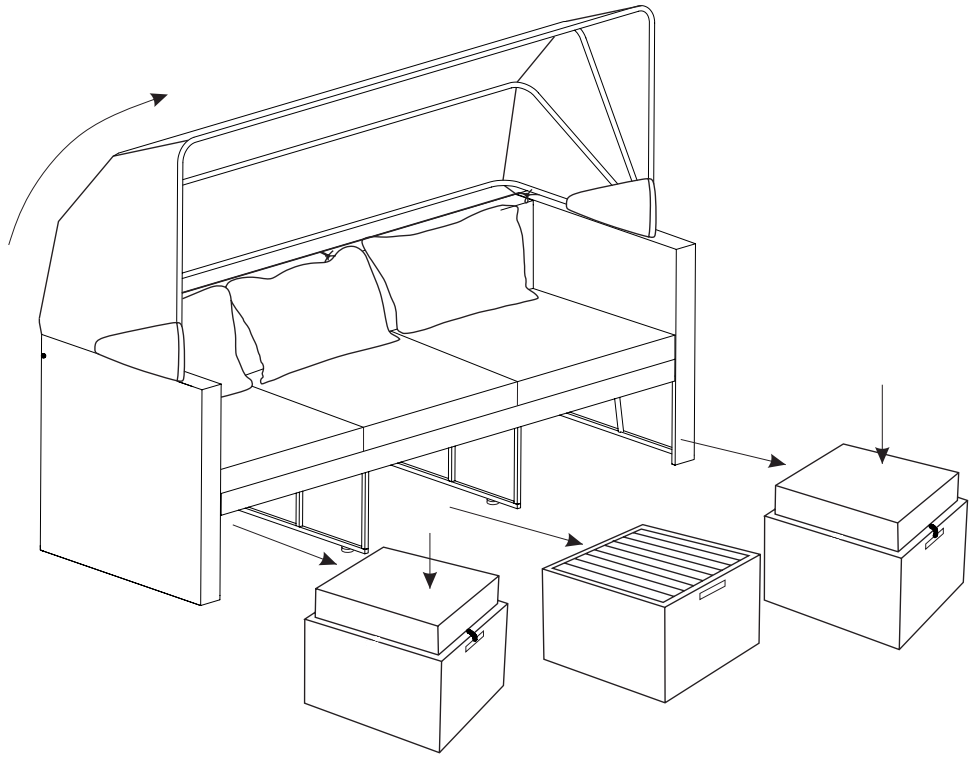

B13

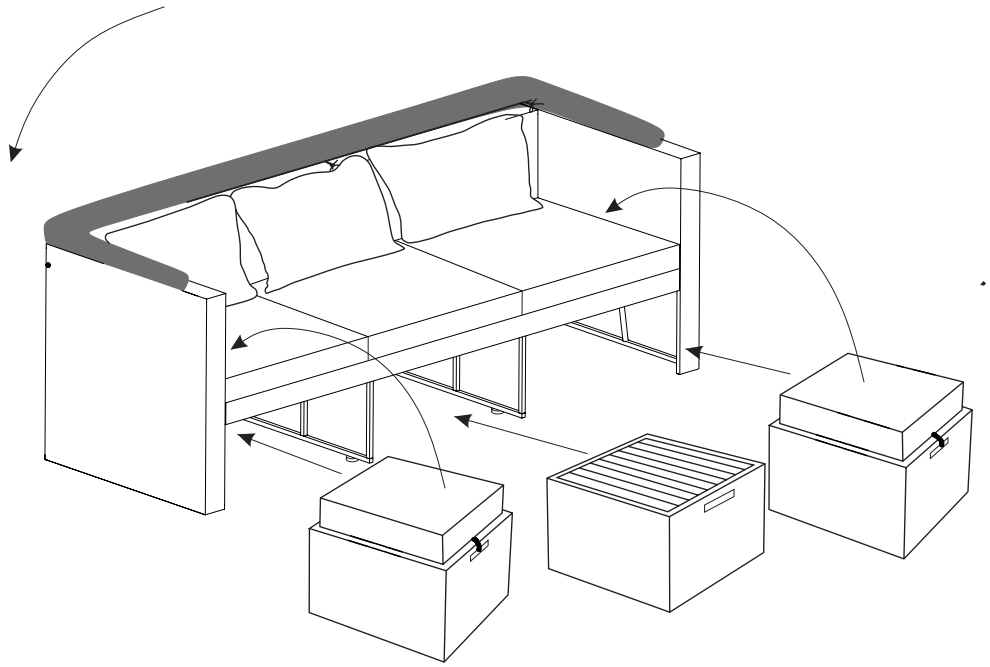

Protective Cover