INSTRUCTION MANUAL

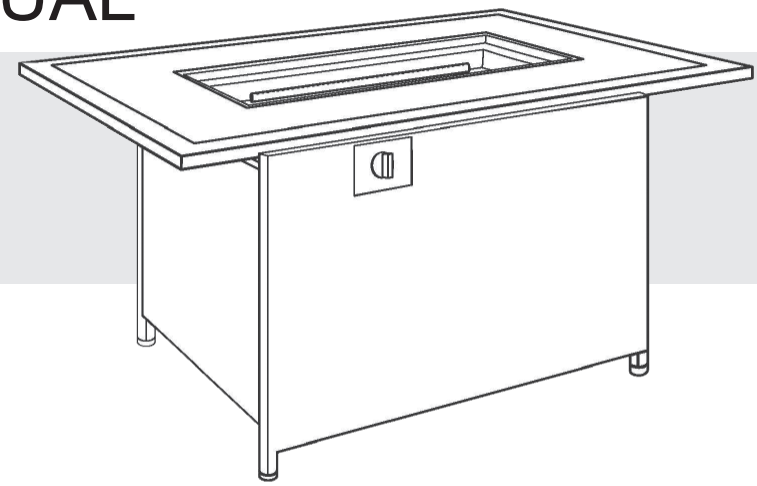

OUTDOOR 52” RECTAGULAR PROPANE FIRETABLE

MODEL NUMBER: COB10002

ITEM NUMBER: HF44988

Thank you for purchasing your new
Outdoor 52” Rectangular Propane Firetable

DO NOT RETURN THIS ITEM TO THE STORE

Should you encounter problems after following all the steps herein contained please contact our Customer Support: Call 1-888-227-3340 or email: customerservice@dekoliving.com. Kindly provide the model number, place and date of purchase and a short description of the problem.

LIMITED WARRANTY This product has a 1 year Limited Warranty. This warranty is limited to the replacement of defective parts only. Labor charges and/or damage incurred during installation, repair, replacement as well as incidental and consequential damages connected with the above are excluded. Any damage to this product as a result of neglect, misuse, accident, improper installation or use other than the purpose **SHALL VOID THIS WARRANTY**

IMPORTANT, RETAIN FOR FUTURE REFERENCE: READ CAREFULLY

Please read and understand this entire manual before attempting to assemble, operate or install the product. Failure to follow the dangers, warnings and cautions contained in this owners manual may result in a fire or explosion causing damage to property, serious bodily injury or death

12/2023

WARNING
FOR YOUR SAFETY

For Outdoor Use Only
(outside any enclosure)

Installer: Leave these instructions with the consumer.
Consumer: Keep these instructions for future reference.

WARNING
FOR YOUR SAFETY

1) Improper installation, adjustment, alteration, service or maintenance can cause injury or property damage.
2) Read the installation, operation, and maintenance instructions thoroughly before installing or servicing this equipment.
3) Failure to follow these instructions could result in fire or explosion, which could cause property damage, personal injury or death.

WARNING
FOR YOUR SAFETY

1. This firepit is for outdoor use only.
2. **DO NOT** use this firepit in a building, garage, boats recreational vehicles, or any other enclosed area.
3. This firepit is not to be operated by children.
4. Always use in accordance with all applicable local, state and national codes. Contact your local fire department for details on firepits.
5. When using this firepit, exercise the same precautions you would do with any open fire.
6. The use of alcohol, prescription or non-prescription drugs may impair the consumer's ability to properly assemble or safely operate this firepit.
7. **DO NOT** use it without reading the entire "Owner's Manual" first.
8. **DO NOT** use this firepit until it is completely assembled.
9. **DO NOT** alter this firepit in any manner.
10. **DO NOT** use gasoline or other flammable vapors or liquids in the vicinity of this or any other firepit.
11. **DO NOT** use this firepit near automobiles, trucks, vans, recreational vehicles, electrical cords or any other combustible objects.
12. Always use this firepit on a hard, level, non-combustible surface.
13. The firepit must be inspected before each use.
14. The safeguard spark screen must be used while burning.
15. **DO NOT** use in windy conditions.
16. **DO NOT** wear flammable or loose clothing when this firepit.
17. **DO NOT** touch any part of the firepit until it is completely cooled down. Never leave a lit firepit unattended.
18. Children should be carefully supervised where they are anywhere near the firepit.
19. **DO NOT** attempt to move or store this firepit until the firepit is completely cooled down.
20. Burning must be inside the metal bowl.
21. **DO NOT** put any hot part of the firepit onto combustible surfaces such as grass, wooden deck or furniture.
22. **USE PROPANE GAS ONLY!**
23. **DO NOT** store or use gasoline or other flammable vapors in the vicinity of this or any other firepit.
    -Service must be performed by a qualified installer.
24. For use with cylinders marked PROPANE only. Do not connect to a remote gas supply.
25. If the firepit is stored indoors, detach and leave propane cylinder outdoors.
26. If you smell gas:
    1. Shut off gas to the firepit.
    2. Extinguish any open flame.
    3. If odor continues, keep away from the firepit and immediately call your gas supplier or fire department.
27. This fire table must be attended at all times!
28. A liquid propane cylinder not connected for use shall not be stored in the vicinity of this or any other firepit.
29. The propane cylinder must be disconnected when this fire table is not use.
30. Do not exceed 1/4" depth of fire glass or lava rocks directly over the burner holes, this may result in unburned propane gas pooling in the firepit.
31. CARBON MONOXIDE HAZARD
    This firepit can produce carbon monoxide which has no odor.
    Using it in an enclosed space can kill you.
    Never use this firepit in an enclosed space such as a camper, tent, car or home.

ALL ABOVE MUST BE EXACTLY FOLLOWED.

Intertek
5010198

⚠ DANGER

This firepit is intended for outdoor use only. It shall not be installed inside a building, garage or any other enclosed area. It shall not be installed on boats or recreational vehicles. A boiler shall not be used on or under any apartment, or condominium balcony or deck.
This firepit produces heat. Respect minimum clearances to all sides of the burner of at least 10 feet (3 m) from any structure or combustible material, and do not use it under an overhead unprotected combustible construction.
Use the burner on a stable leveled non-combustible surface and In an area clear of combustible materials. Asphalt surface may not be acceptable for this purpose.

⚠ CAUTION

The installation of this product must conform with local codes or, in the absence oflocal codes, with either the National Fuel Gas

FOR OUTDOOR USE ONLY! This firepit shall be used only outdoors in a well-ventilated space and shall not be used in a building, garage, or any other enclosed area.

USE PROPANE GAS ONLY!
Use only with a propane gas tank (sold separately). Do not attach to a remote gas supply. Propane gas is not natural gas. Only use propane gas for this fire pit. Never use charcoal or any other solid fuel in the fire pit. During ignition procedure, never get your face close to the burner as an unnoticed flame may light up and cause injury.

LIQUID PROPANE GAS WARNING: Do not exceed 1/4 in. depth of lava rocks directly above burner holes. Applying too much media may result in unburned gas pooling in fire pit. Ventilation is required to allow fresh air into enclosure and for any residual gas to escape.

- Do not operate the fire pit if there is a gas leak present.
- Never use a flame to check for gas leaks.
- The max. inlet supply pressure: max. gas supply 11 inch w.c. (2.74kPa).
- The gas pressure regulator provided with the fire pit must be used.
- Use liquid propane gas tanks only with these required measurements: 12 in. (diameter) x 18 in. (tall) with 20 lb. capacity maximum.
- Propane tank used must include a collar to protect the propane gas tank valve.
- Never fill the propane gas tank beyond 80% full.
- Propane gas tank supply system must be arranged for vapor withdrawal.
- Do not use a propane gas tank with a damaged valve and any other worn out parts. A dented or rusty propane gas tank may be
- hazardous and should be checked by your gas supplier prior to use.
- Do not burn any other materials than are supplied with and intended for use in this fire pit.
- Lava rocks could hit somebody's face or eyes during initial start of this unit, so please keep away from the fire pit for the first 20 minutes after it has been ignited.
- Do not operate fire pit unless it is completely assembled and all parts are in place.
- Pay attention when operating the fire pit. It is hot when in use and should never be left unattended. Do not move it while in operation.
- Do not use this fire pit for cooking.
- Do not put any other fireplace cover or anything flammable on, beneath or around the fire pit.
- Users should be alerted to the hazards of high surface temperatures and keep a safe distance to avoid burning or clothing ignition.
- Do not sit on the fire pit. Do not rest feet or hands on the fire pit.
- Never lean over the open fire pit or place hands or fingers on the upper portion of an operational unit.
- Keep any electrical supply cords and the fuel supply hose away from any heated surfaces.
- Combustible materials should never be within 72 inches of the top, 48 inches of the back or sides of the fire pit.
- This fire pit must be attended at all times!
- Should the fire go out while burning, turn the gas valve off. Follow the instructions and wait five minutes before attempting to relight.
- Do not use this fire pit if any part has been under water.
- Do not pour water into fire pit.
- Immediately call a qualified service technician to inspect the appliance and to replace any part of the control system and any gas control which has been under water.
- Do not light or use gas unit if lava rocks are wet. Ensure lava rocks are completely dry before igniting as intense heat could cause the rocks to crack or pop.
- Do not attempt to disconnect the gas regulator or any gas fittings while your fire pit is in operation.
- Do not handle fire pit until it is shut off and completely cooled.
- The propane gas tank must be disconnected when fire pit is not in use.
- Do not store a spare or disconnected propane gas tank under or near this fire pit, or in the vicinity of any other appliance.
- If the fire pit is stored indoors, detach and leave propane gas tank outdoors.
- Maximum propane gas pressure is 250psi.
- The LP gas supply tank must be constructed and marked in accordance with the specifications for LP gas tanks of the U.S. Department of Transportation (DOT) or the National Standard of Canada CAN/CSA-B339, LP gas tanks, spheres and tubes for the Transportation of Dangerous Goods and Commission.
- The LP gas tank must have a listed overfilling prevention device (OPD) and a QCCI or Type I, (CGA810) LP gas tank connection.

Preparation and Operation

BEFORE USING THE OUTDOOR BURNER:

1. Install or operate the unit in an open area.
2. Make sure the propane cylinder / tank valve is on “OFF” position”(clockwise).

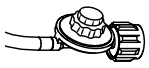

3. Make sure propane gas control on regulator is in “OFF” position (counterclockwise).
4. Inspect orifice at end of hose and regulator. Remove all debris.
   - Before each use inspect hose for damage, wear, cuts or leaks. If any damage is identified, the hose must be replaced before the firepit is used. **Do not** attempt to repair yourself. The replacement hose assembly shall be specified by the manufacturer. Keep fuel supply hose away from any heated surface.

LEAK TESTING:

IMPORTANT: DO NOT SMOKE WHILE LEAK TESTING NEVER LEAK TEST WITH AN OPEN FLAME !!

Before each use, follow the procedures below to check the entire system for leaks. If the smell of gas is detected at anytime, turn off propane gas supply and immediately check the entire system for leaks.

TO CREATE A SOAPY SOLUTION FOR LEAK TEST: Mix 3 tablespoons of liquid dish detergent with water until the container is full. Then, use a spray bottle (make sure to shake it well to create more bubbles) or an applicator brush to apply the solution to all fittings, connections, and gas hoses. Before conducting the initial leak test, ensure that the propane cylinder / tank is full.

LEAK TESTING PROCEDURE:

1. Before performing a leak test, be sure that no sparks can occur and you are in a spacious outdoor area.
2. Connect the propane gas tank to the regulator and turn the valve on the unit to the “off” position.
3. Brush a soap and water mixture on all connections. Turn the gas supply on; if bubbles occur on any connection there may be a leak. If you smell gas or a leak is discovered turn the gas valve off, disconnect propane gas tank and do not use the appliance until the leak is repaired.
4. Do not use the heating unit without inspecting the gas hose. If there are signs of wear or abrasion you must replace the hose (if applicable). Pumice stones/lava rocks/LavaGlass could pop up and strike somebody’s face during the process of lighting this unit; stand away from the unit for the first 20 minutes after igniting. Flame height should be a yellow/blue color between 2 - 10 inches in height.
5. Wait 50 minutes after extinguishing flame prior to placing a lid (if applicable) or protective cover on heating item.

To Light the Firepit:

1. Make sure the control knob is in the “OFF” position.
2. Open the access door and slowly open the valve on the propane gas tank by turning the knob counterclockwise then close the access door.
3. Push the ignition control knob in fully and rotate about 1/4 turn counterclockwise until a click is heard, it may take several attempts to light the burner.
4. If ignition doesn’t occur within a few seconds, release the control knob and rotate to the “OFF” position. Wait for 5 minutes for propane gas to clear and then repeat the above lighting instructions.
5. To adjust the flame, turn the control knob either clockwise or counterclockwise depending on whether you want to lower or raise the flame.

To Extinguish the Firepit:

1. Turn control knob clockwise to the “HIGH” position; push and continue turning the control knob to the “OFF” position.
2. Close the cylinder valve on the propane gas tank if you don’t intend to use it for a long time.

Maintenance:

1. Keep your firepit free and from combustible materials.
2. Visually inspect the firepit burner from obstructions and keep firepit free and clear from debris .
3. After the firepit burner and lava rocks are completely cooled down, use a soft brush to get rid of the mild stains, loose dirt and soil.
4. Wipe with a soft cloth.
5. Stubborn stains, discoloration and rust pitting can occur from exposure to harsh outdoor conditions.
6. Be careful not to let any powder or solvent come in contact with painted or plastic components as damage may occur.
7. Store the firepit in a cool dry place away from sunlight.
8. The propane gas tank must be disconnected and removed from the firepit before the it can be stored.
9. If your firepit is equipped with a battery, make sure both the propane gas and the firepit are turned off before changing battery.

Parts List

ITEM	DESCRIPTION	QTY
A	Lava Rock	2 Boxes
B	Back Panel	1
C	Front Panel	1
D	End Panel	1
E	Tank Holder	1
F	Door	1

ITEM	DESCRIPTION	QTY
G	Short Screws	4
H	Medium Screws	4
I	Long Screws	4
J	Top	1
K	PU Cover	1
L	Metal Cover	1

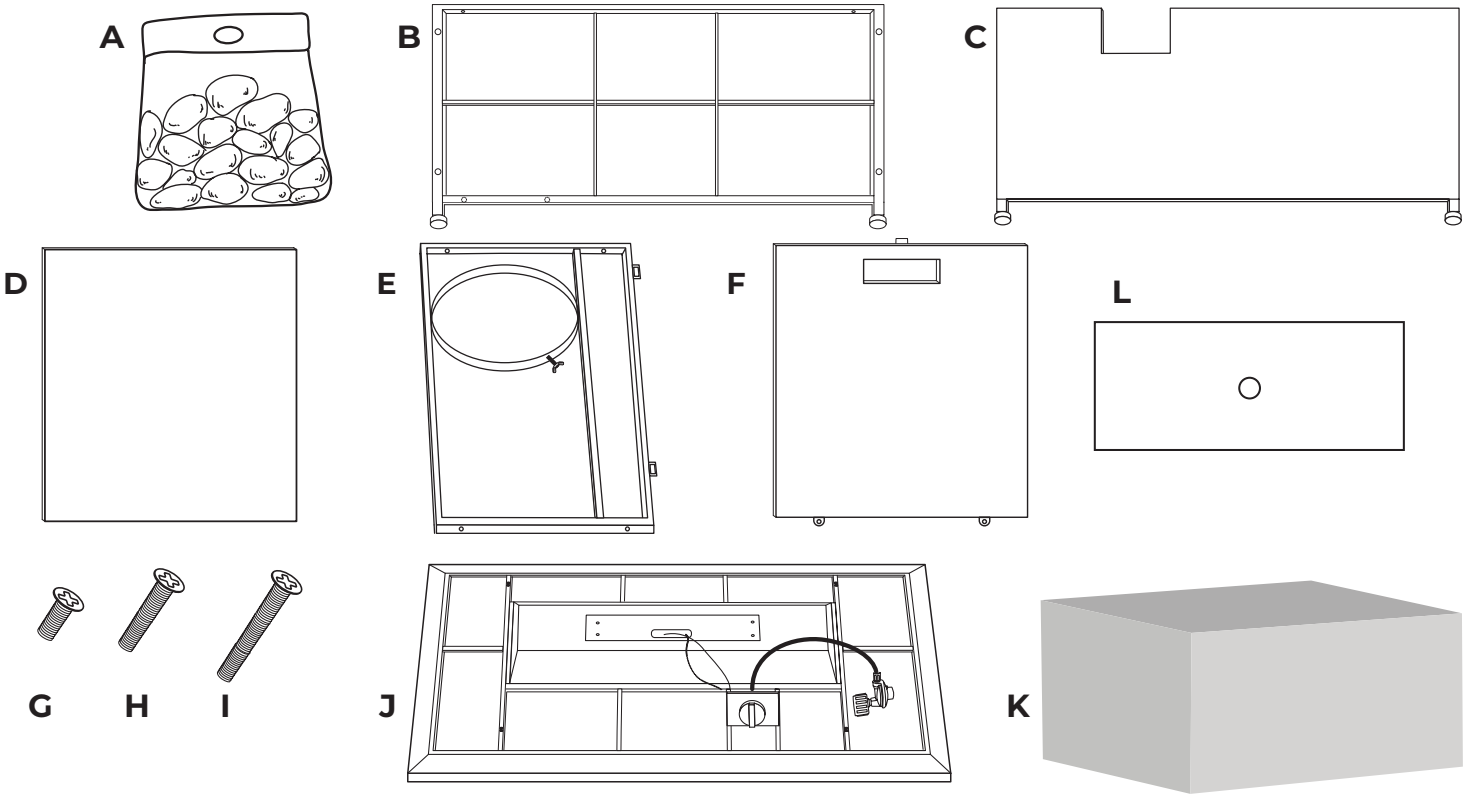

Glass Assembly

ITEM	DESCRIPTION	QTY
A	Long Glass	2
B	Short Glass	2
C	Glass Clamp	8
D	Screw	16

1 - Assemble the glass on a flat table. It is easier with 2 people, one to hold the glass and the other to fasten.
2 - Unscrew all the pre-assembled screws on the glass clamps. Thenm assemble one glass panel to the other glass panel. Repeat for the other 2 glass panels. Then, assemble the 2 glass sections together with the final glass clamps as shown below.
3 - Place the glass section onto the firepit. Be gentle and be careful no to over-tighten the glass clamps.

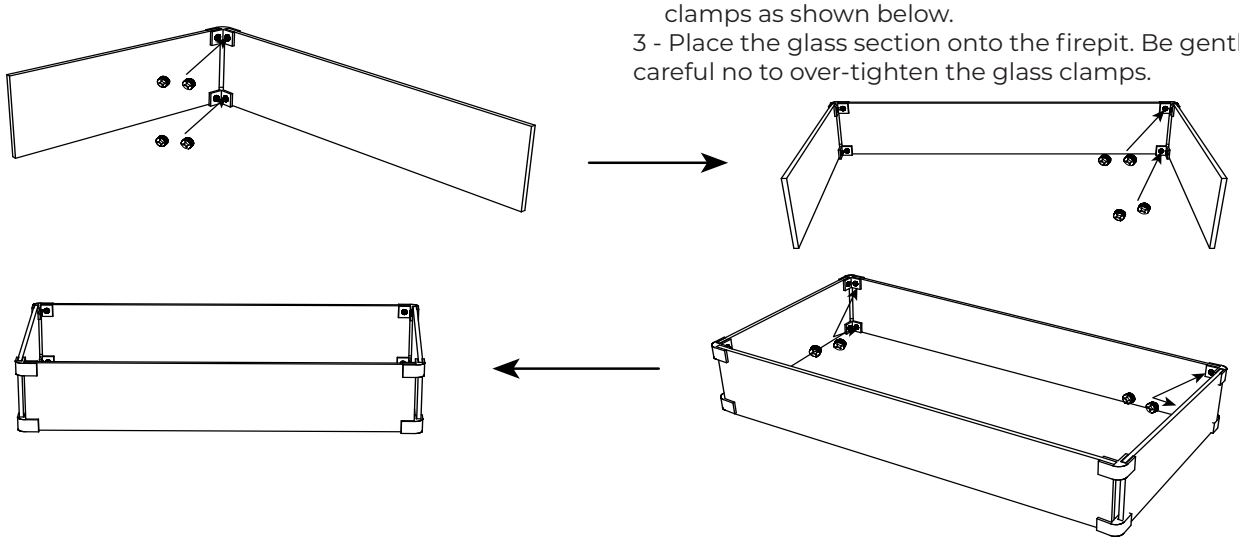

Assembly Instructions

Please keep this owner's manual for future reference

Open the box and inspect the top of the firepit, open the flaps all the way then flip the box over on the top of the protective sheet.

Step 1. Pull off the carton leaving the top in place. Caution: Do not over tighten the screws until completely assembled.
Step 2. Mount the back panel (B) first using 2 medium screws (H)
Step 3. Mount the front panel (C) using 2 medium screws (H).
Step 4. Mount the end panel (D) using the 4 long screws with washers (I).
Step 5. Mount the tank holder (E) using 4 short screws (G).
Step 6. Using 2 people, flip the firepit over. There are two slots on the edge of the tank holder that holds the two tabs on the bottom of the door. Fit the tabs into the slots and test the door closed. Then, add the lava rocks (A).

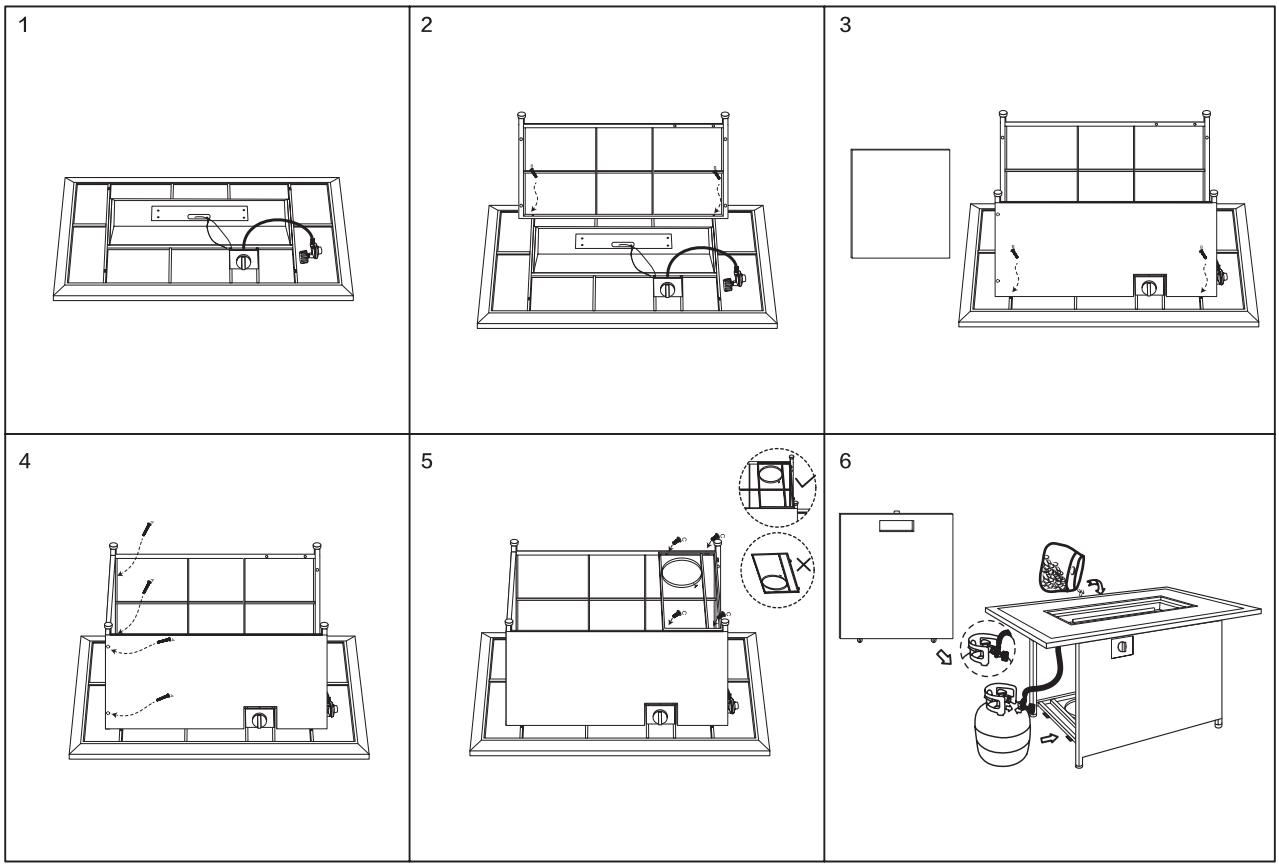

Propane Tank & Lava Rocks Installation

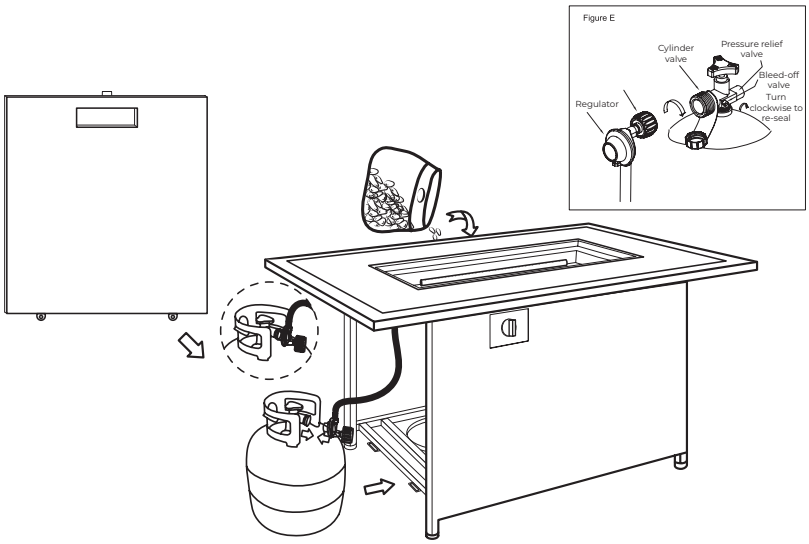

Connect the pressure-regulating valve to the propane tank (Figure E)
1 - Turn the cylinder valve clockwise to the gas supply on the propane tank.
2 - Screw regulator coupling clockwise (by hand only) Make sure it is fastened.

Lava Rock Installation

Keep screen clear. Do not place lava rocks on the screen (see figure below).
To prevent the flame from being extinguished, the firepit burner must be completely covered by the lava rocks (see figure below).

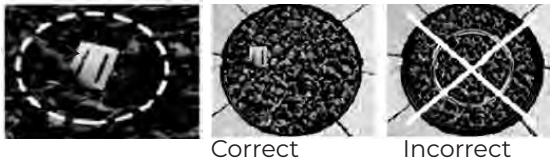

Correct Incorrect